Chapter 6

The Transport Layer

The Transport Service

- Services Provided to the Upper Layers
- Transport Service Primitives
- Berkeley Sockets
- An Example of Socket Programming:
  a) An Internet File Server

Services Provided to the Upper Layers

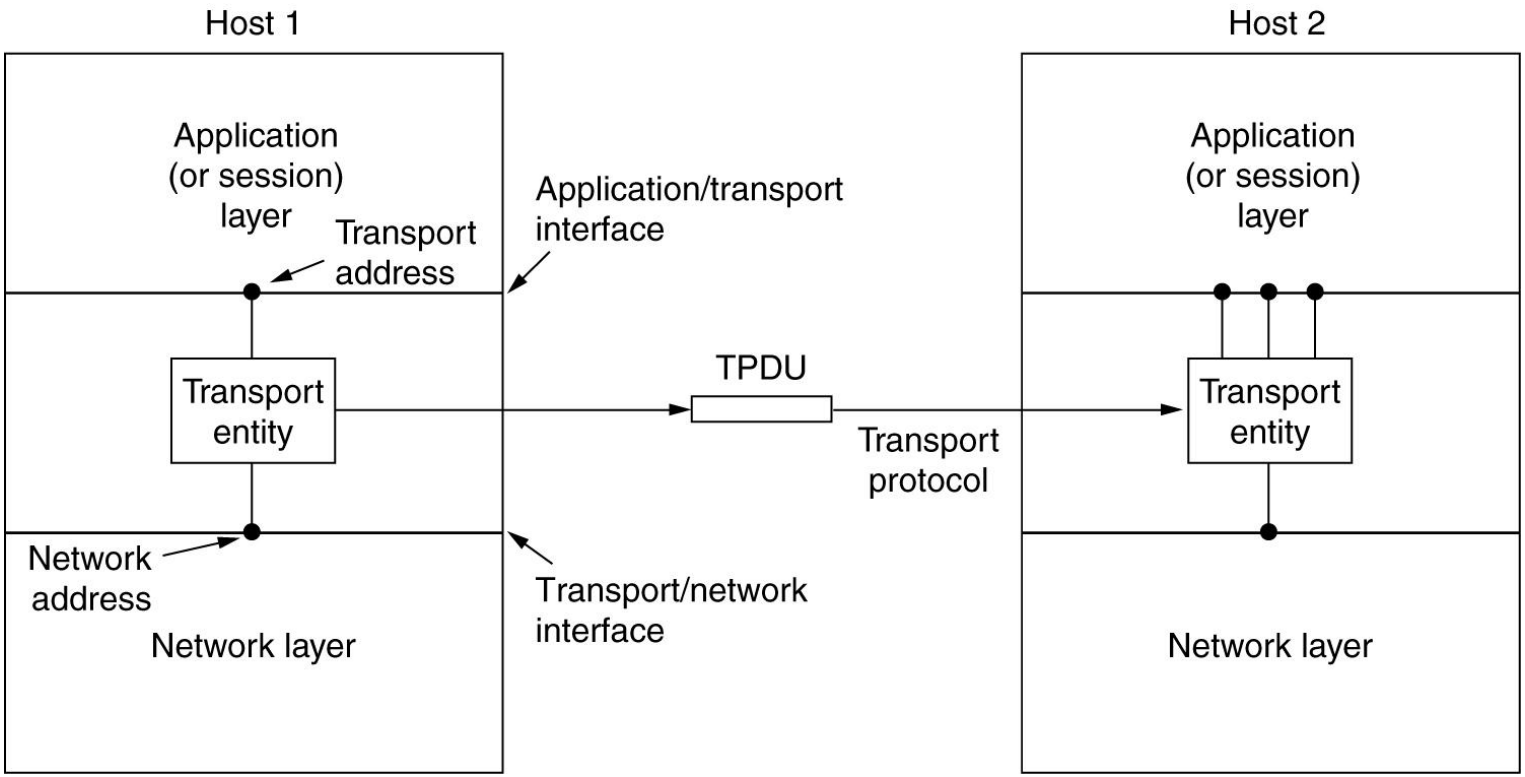

The network, transport, and application layers.

Transport Service Primitives

Primitive	Packet sent	Meaning
LISTEN	(none)	Block until some process tries to connect
CONNECT	CONNECTION REQ.	Actively attempt to establish a connection
SEND	DATA	Send information
RECEIVE	(none)	Block until a DATA packet arrives
DISCONNECT	DISCONNECTION REQ.	This side wants to release the connection

The primitives for a simple transport service.

Transport Service Primitives (2)

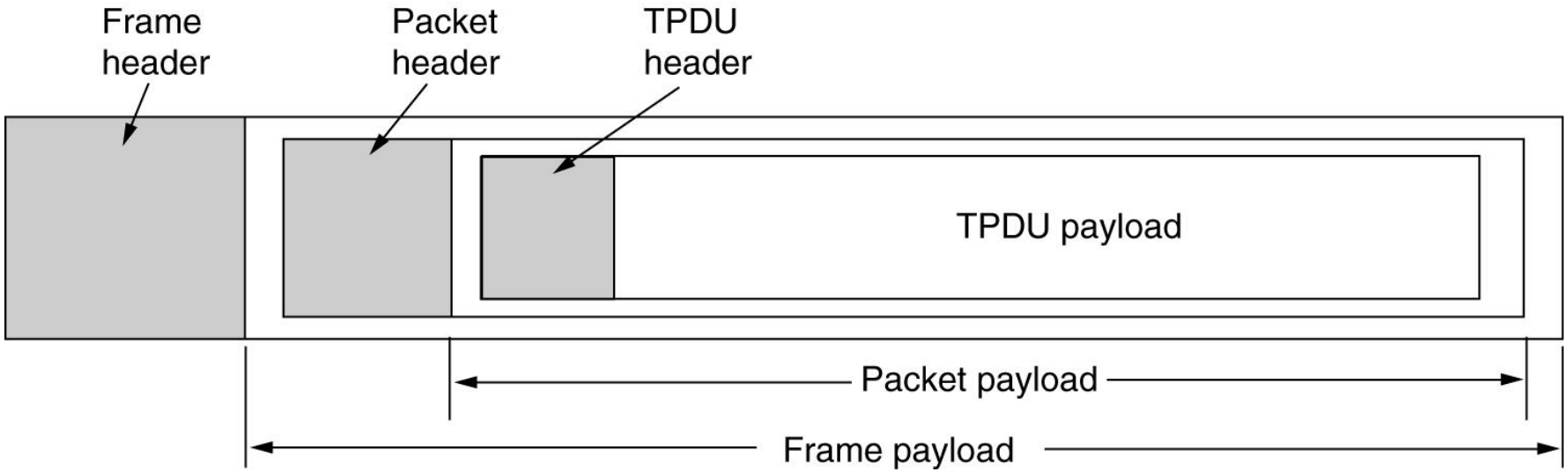

The nesting of TPDUs, packets, and frames.

Transport Service Primitives (3)

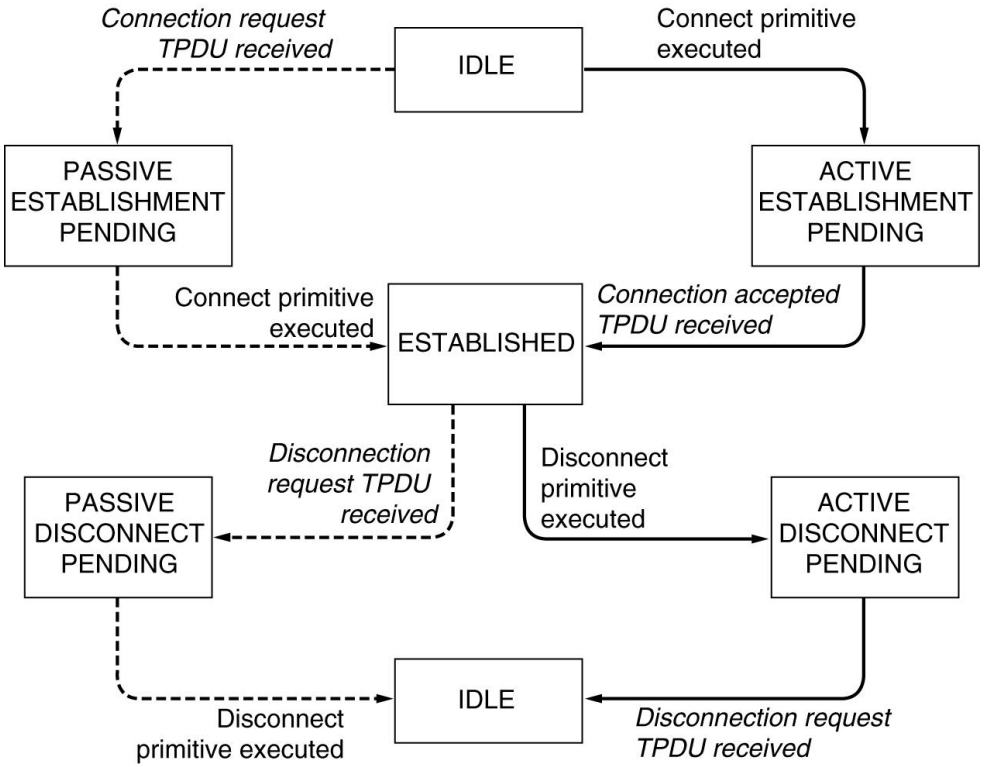

A state diagram for a simple connection management scheme. Transitions labeled in italics are caused by packet arrivals. The solid lines show the client's state sequence. The dashed lines show the server's state sequence.

Berkeley Sockets

Primitive	Meaning
SOCKET	Create a new communication end point
BIND	Attach a local address to a socket
LISTEN	Announce willingness to accept connections; give queue size
ACCEPT	Block the caller until a connection attempt arrives
CONNECT	Actively attempt to establish a connection
SEND	Send some data over the connection
RECEIVE	Receive some data from the connection
CLOSE	Release the connection

The socket primitives for TCP.

Socket Programming Example: Internet File Server

```
/* This page contains a client program that can request a file from the server program
 * on the next page. The server responds by sending the whole file.
 */

#include <sys/types.h>
#include <sys/socket.h>
#include <netinet/in.h>
#include <netdb.h>

#define SERVER_PORT 12345                /* arbitrary, but client & server must agree */
#define BUF_SIZE 4096                    /* block transfer size */

int main(int argc, char **argv)
{
  int c, s, bytes;
  char buf[BUF_SIZE];                    /* buffer for incoming file */
  struct hostent *h;                     /* info about server */
  struct sockaddr_in channel;            /* holds IP address */

  if (argc != 3) fatal("Usage: client server-name file-name");
  h = gethostbyname(argv[1]);            /* look up host's IP address */
  if (!h) fatal("gethostbyname failed");

  s = socket(PF_INET, SOCK_STREAM, IPPROTO_TCP);
  if (s <0) fatal("socket");
  memset(&channel, 0, sizeof(channel));
  channel.sin_family= AF_INET;
  memcpy(&channel.sin_addr.s_addr, h->h_addr, h->h_length);
  channel.sin_port= htons(SERVER_PORT);

  c = connect(s, (struct sockaddr *) &channel, sizeof(channel));
  if (c < 0) fatal("connect failed");

  /* Connection is now established. Send file name including 0 byte at end. */
  write(s, argv[2], strlen(argv[2])+1);

  /* Go get the file and write it to standard output. */
  while (1) {
      bytes = read(s, buf, BUF_SIZE);    /* read from socket */
      if (bytes <= 0) exit(0);           /* check for end of file */
      write(1, buf, bytes);              /* write to standard output */
  }
}

fatal(char *string)
{
  printf("%s\n", string);
  exit(1);
}
```

Client code using sockets.

Socket Programming Example: Internet File Server (2)

```
#include <sys/types.h>                  /* This is the server code */
#include <sys/fcntl.h>
#include <sys/socket.h>
#include <netinet/in.h>
#include <netdb.h>
#define SERVER_PORT 12345               /* arbitrary, but client & server must agree */
#define BUF_SIZE 4096                   /* block transfer size */
#define QUEUE_SIZE 10
int main(int argc, char *argv[])
{
  int s, b, l, fd, sa, bytes, on = 1;
  char buf[BUF_SIZE];                   /* buffer for outgoing file */
  struct sockaddr_in channel;           /* hold's IP address */

  /* Build address structure to bind to socket. */
  memset(&channel, 0, sizeof(channel));  /* zero channel */
  channel.sin_family = AF_INET;
  channel.sin_addr.s_addr = htonl(INADDR_ANY);
  channel.sin_port = htons(SERVER_PORT);

  /* Passive open. Wait for connection. */
  s = socket(AF_INET, SOCK_STREAM, IPPROTO_TCP);    /* create socket */
  if (s < 0) fatal("socket failed");
  setsockopt(s, SOL_SOCKET, SO_REUSEADDR, (char *) &on, sizeof(on));

  b = bind(s, (struct sockaddr *) &channel, sizeof(channel));
  if (b < 0) fatal("bind failed");

  l = listen(s, QUEUE_SIZE);            /* specify queue size */
  if (l < 0) fatal("listen failed");

  /* Socket is now set up and bound. Wait for connection and process it. */
  while (1) {
      sa = accept(s, 0, 0);             /* block for connection request */
      if (sa < 0) fatal("accept failed");

      read(sa, buf, BUF_SIZE);          /* read file name from socket */

      /* Get and return the file. */
      fd = open(buf, O_RDONLY);         /* open the file to be sent back */
      if (fd < 0) fatal("open failed");

      while (1) {
          bytes = read(fd, buf, BUF_SIZE); /* read from file */
          if (bytes <= 0) break;        /* check for end of file */
          write(sa, buf, bytes);        /* write bytes to socket */
      }
      close(fd);                        /* close file */
      close(sa);                        /* close connection */
  }
}
```

Client code using sockets.

Elements of Transport Protocols

- Addressing
- Connection Establishment
- Connection Release
- Flow Control and Buffering
- Multiplexing
- Crash Recovery

Transport Protocol

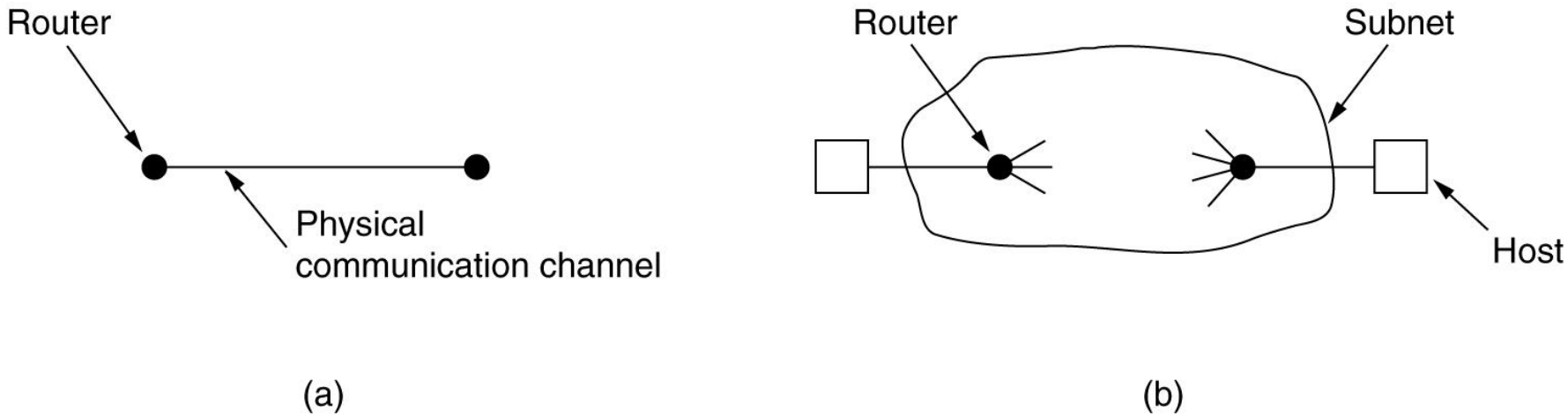

(a) Environment of the data link layer.
(b) Environment of the transport layer.

Addressing

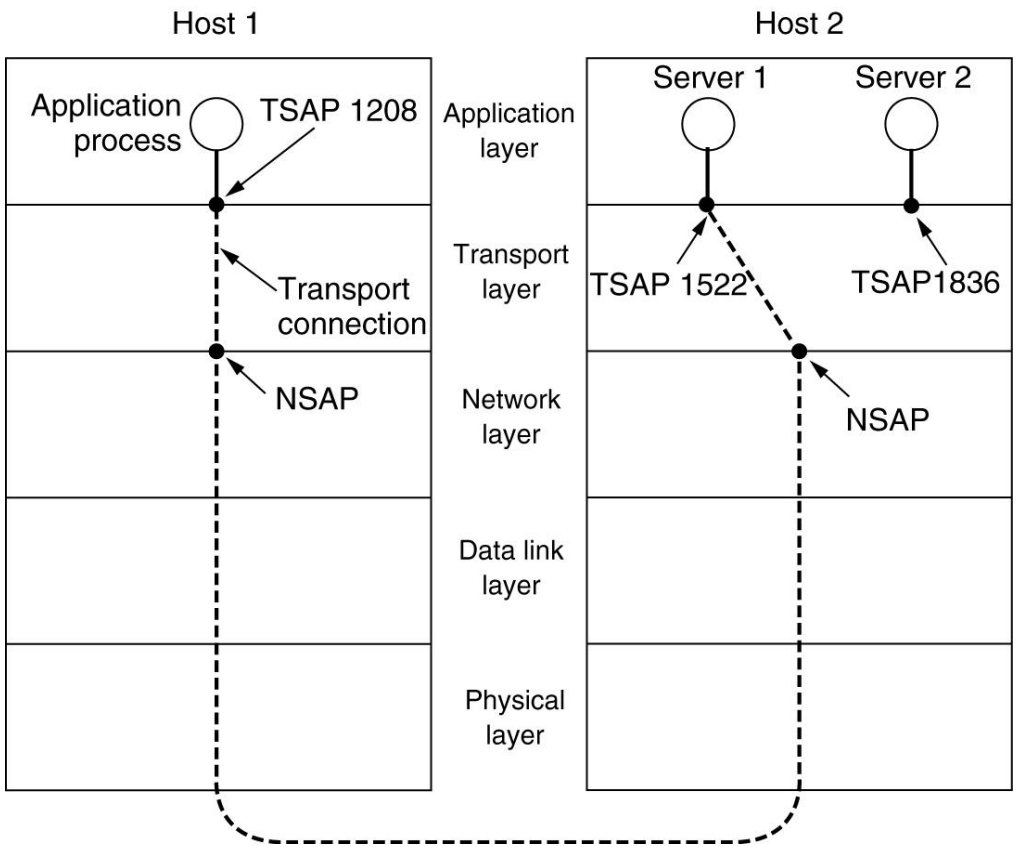

TSAPs, NSAPs and transport connections.

Connection Establishment

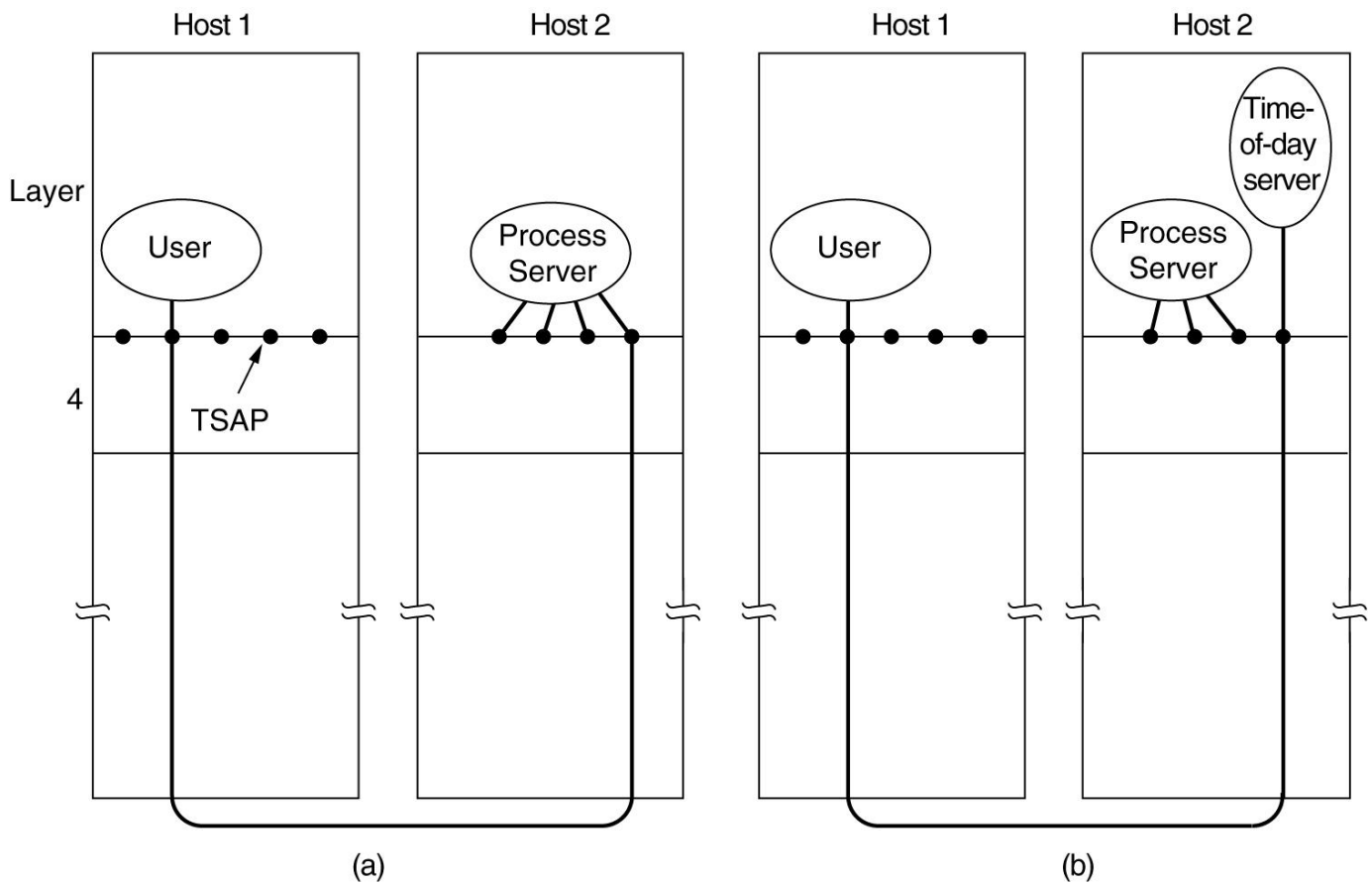

How a user process in host 1 establishes a connection with a time-of-day server in host 2.

Connection Establishment (2)

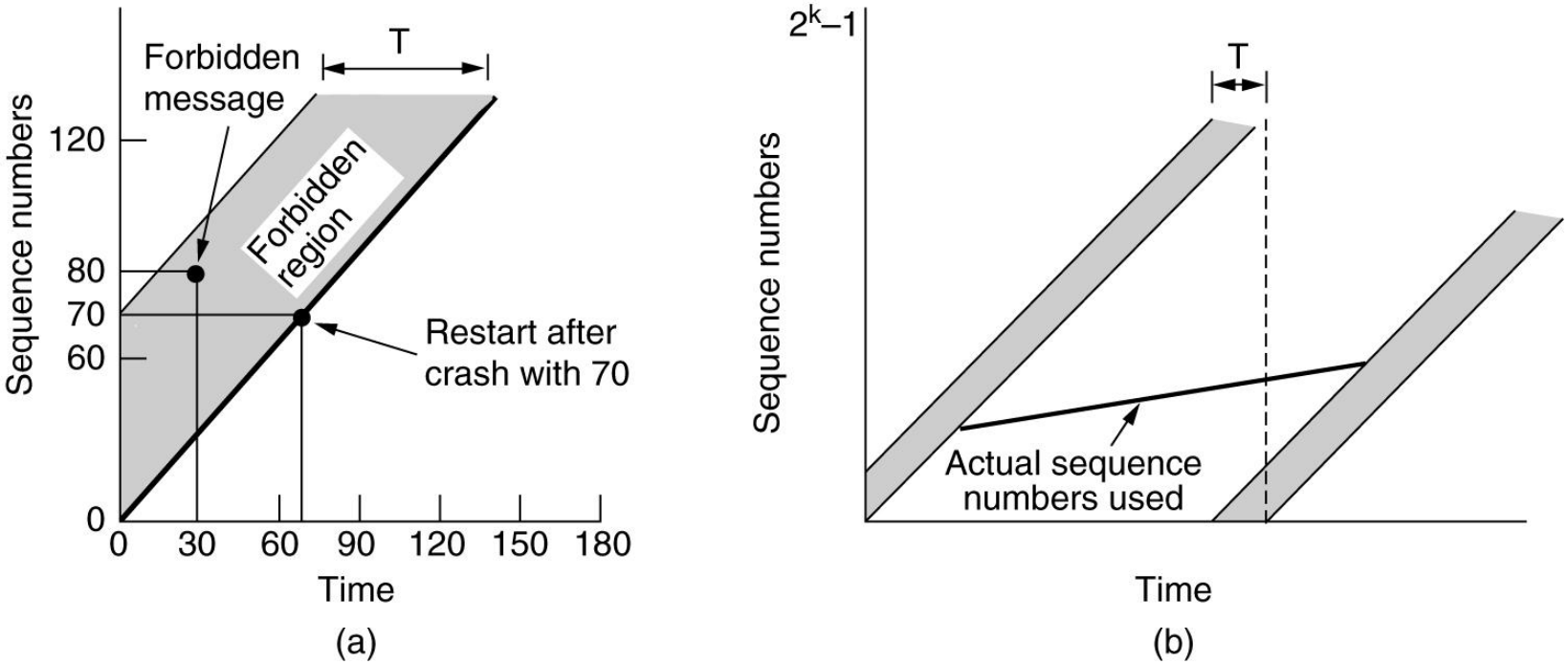

(a) TPDUs may not enter the forbidden region.

(b) The resynchronization problem.

Connection Establishment (3)

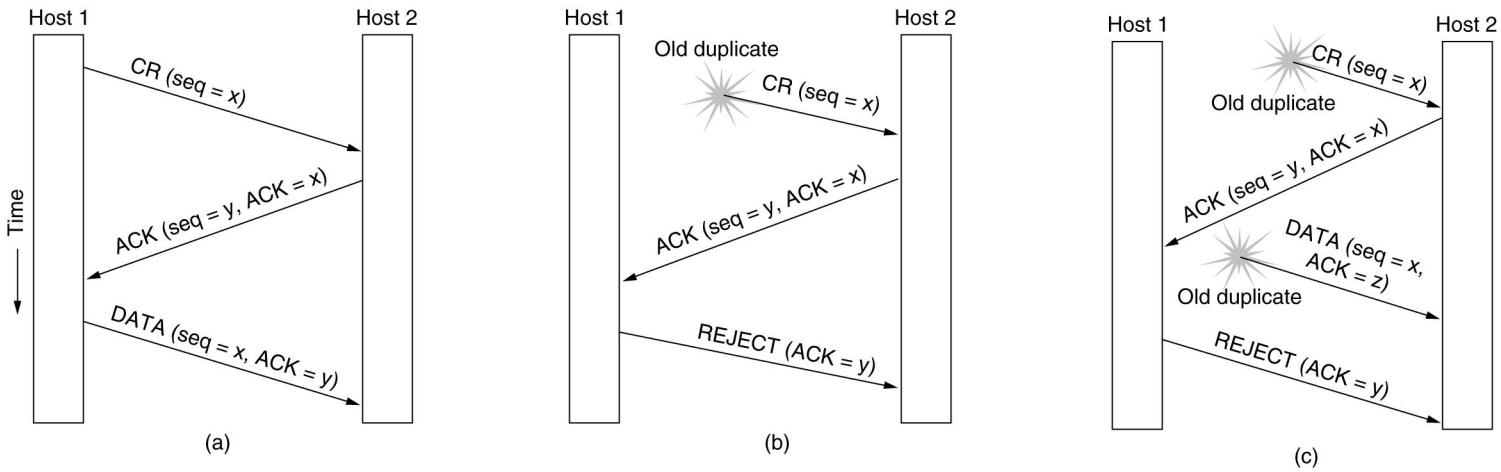

Three protocol scenarios for establishing a connection using a three-way handshake. CR denotes CONNECTION REQUEST.

(a) Normal operation,

(b) Old CONNECTION REQUEST appearing out of nowhere.

(c) Duplicate CONNECTION REQUEST and duplicate ACK.

Connection Release

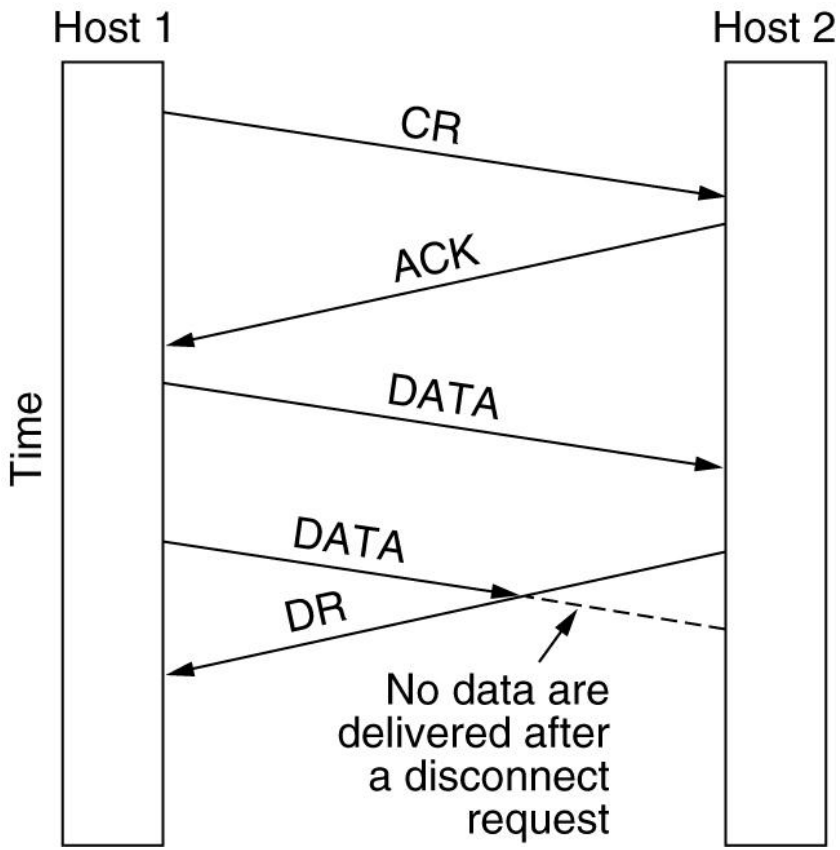

Abrupt disconnection with loss of data.

Connection Release (2)

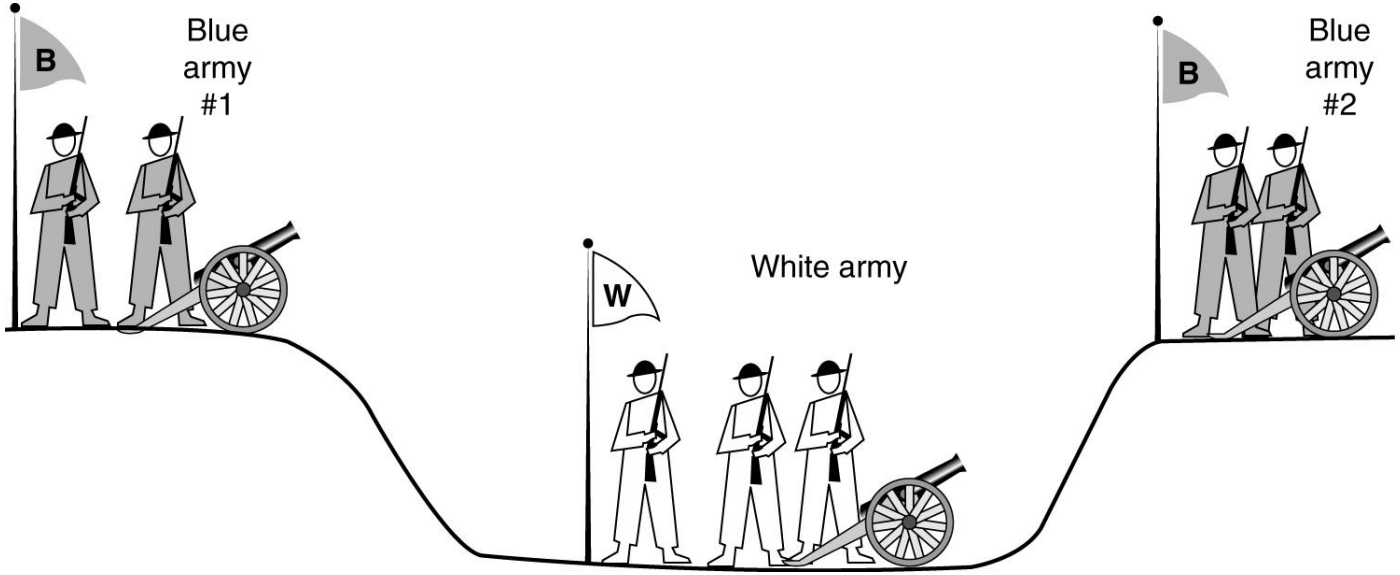

The two-army problem.

Connection Release (3)

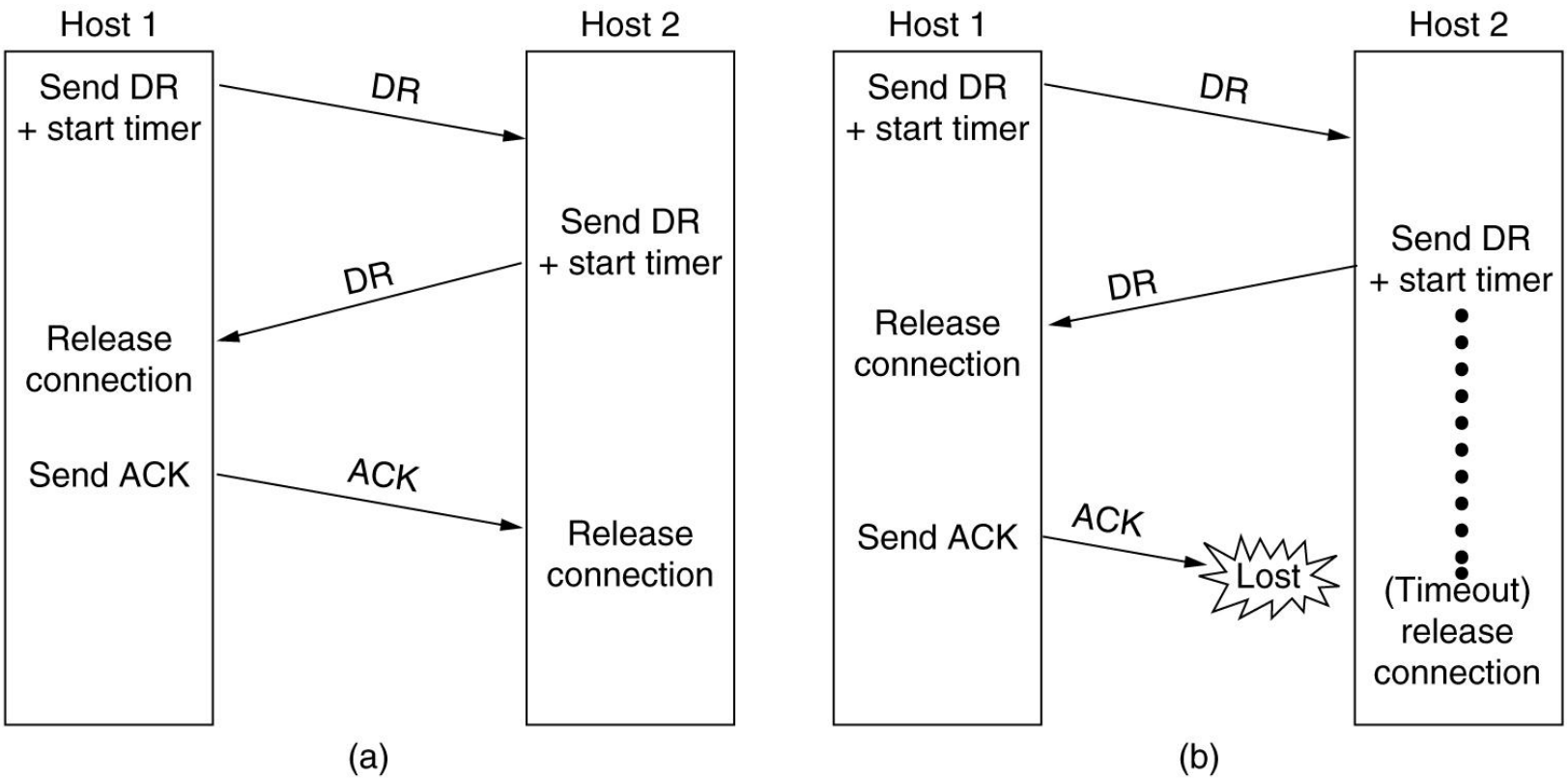

Four protocol scenarios for releasing a connection. (a) Normal case of a three-way handshake. (b) final ACK lost.

Connection Release (4)

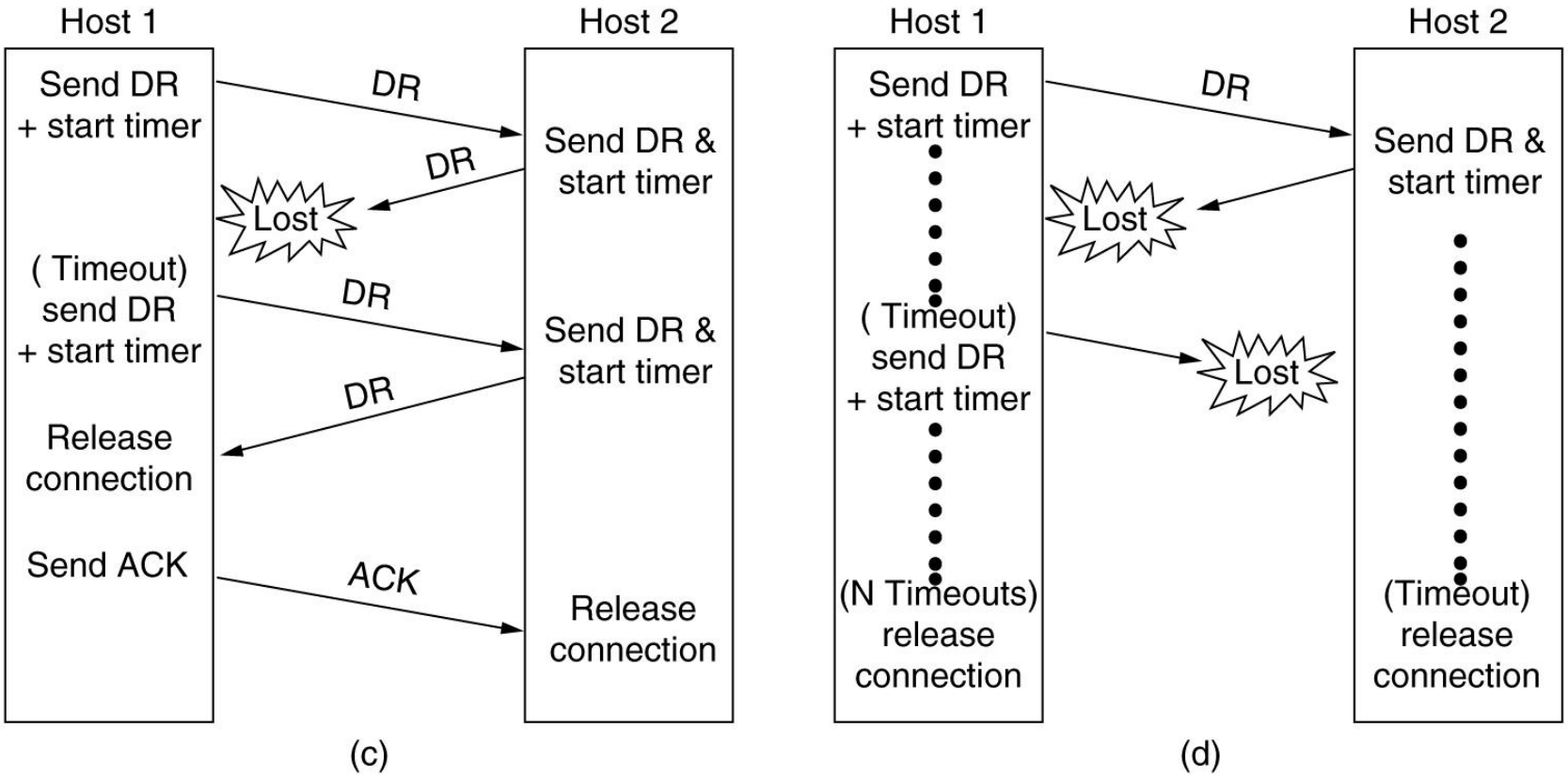

(c) Response lost. (d) Response lost and subsequent DRs lost.

Flow Control and Buffering

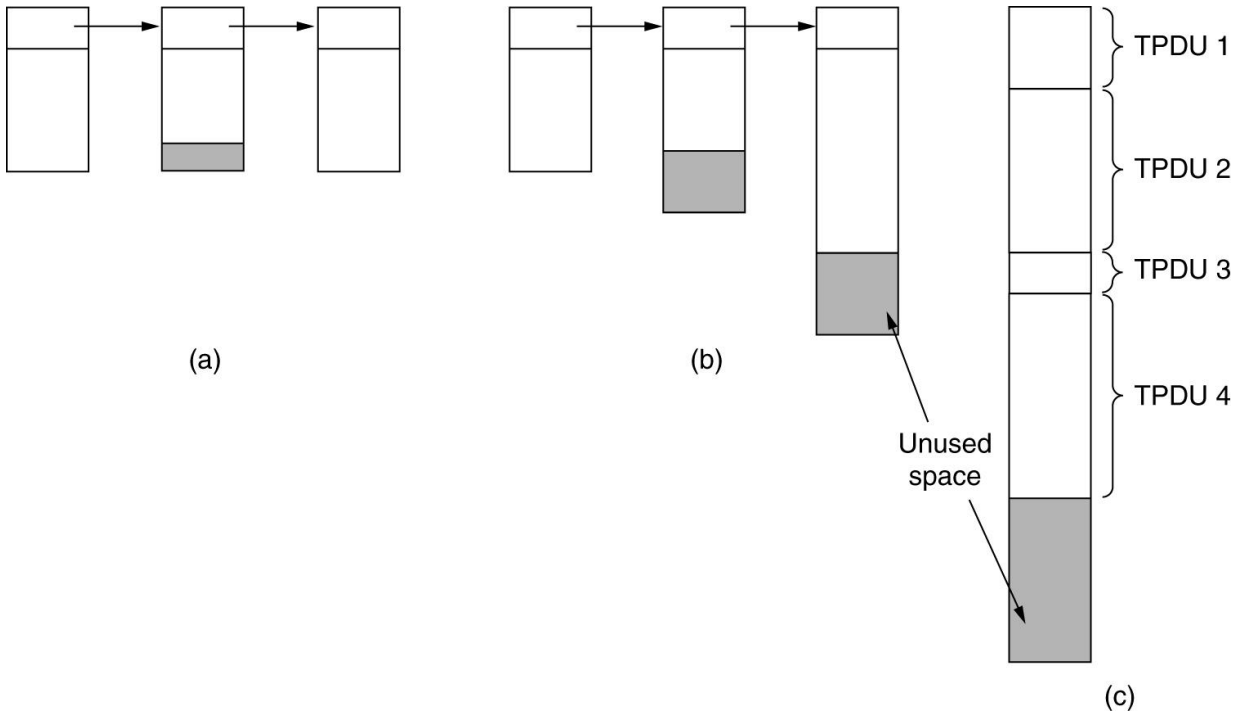

(a) Chained fixed-size buffers. (b) Chained variable-sized buffers.
(c) One large circular buffer per connection.

Flow Control and Buffering (2)

	A	Message	B	Comments
1	→	< request 8 buffers>	→	A wants 8 buffers
2	←	<ack = 15, buf = 4>	←	B grants messages 0-3 only
3	→	<seq = 0, data = m0>	→	A has 3 buffers left now
4	→	<seq = 1, data = m1>	→	A has 2 buffers left now
5	→	<seq = 2, data = m2>	•••	Message lost but A thinks it has 1 left
6	←	<ack = 1, buf = 3>	←	B acknowledges 0 and 1, permits 2-4
7	→	<seq = 3, data = m3>	→	A has 1 buffer left
8	→	<seq = 4, data = m4>	→	A has 0 buffers left, and must stop
9	→	<seq = 2, data = m2>	→	A times out and retransmits
10	←	<ack = 4, buf = 0>	←	Everything acknowledged, but A still blocked
11	←	<ack = 4, buf = 1>	←	A may now send 5
12	←	<ack = 4, buf = 2>	←	B found a new buffer somewhere
13	→	<seq = 5, data = m5>	→	A has 1 buffer left
14	→	<seq = 6, data = m6>	→	A is now blocked again
15	←	<ack = 6, buf = 0>	←	A is still blocked
16	•••	<ack = 6, buf = 4>	←	Potential deadlock

Dynamic buffer allocation. The arrows show the direction of transmission. An ellipsis (…) indicates a lost TPDU.

Multiplexing

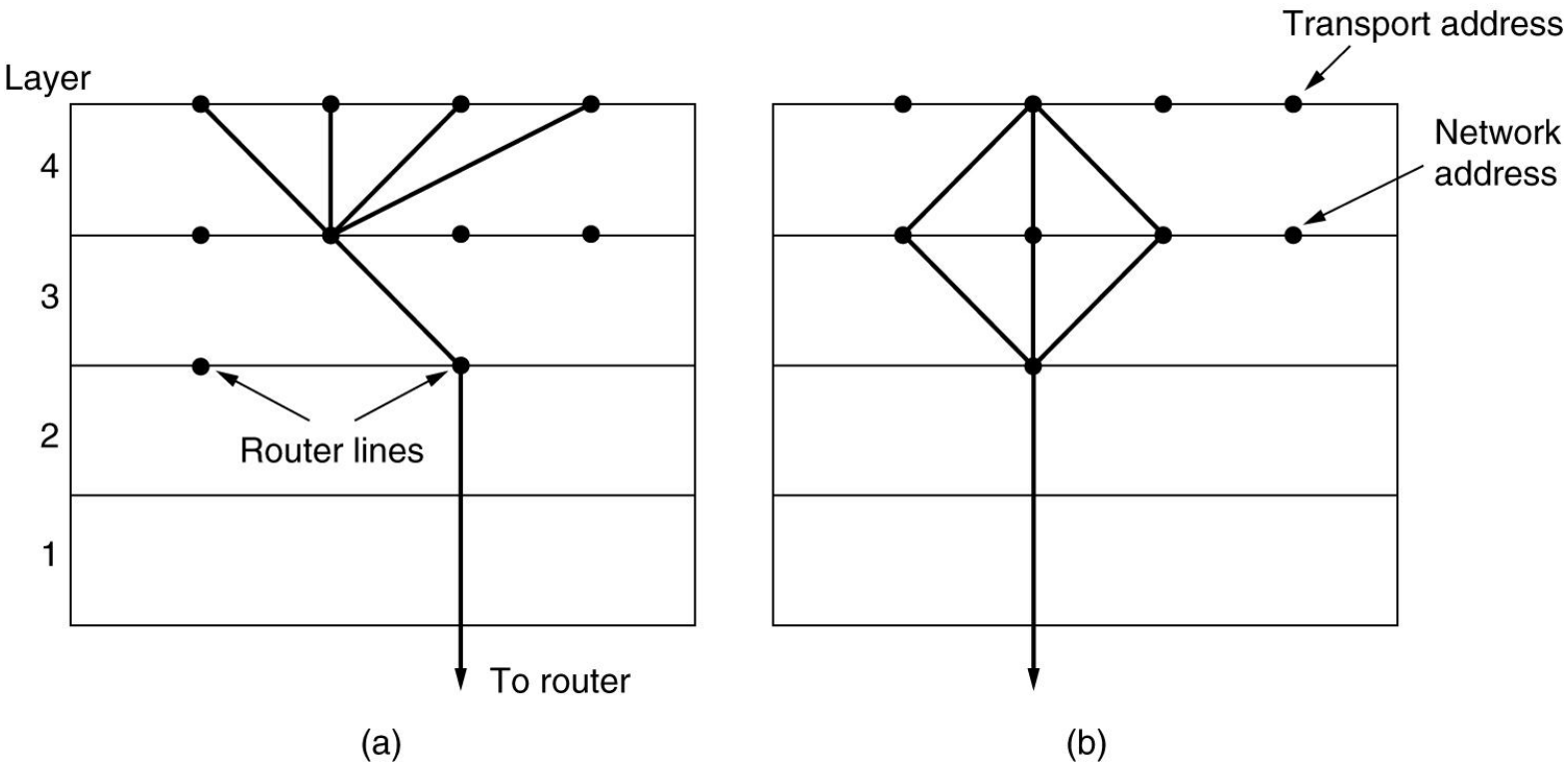

(a) Upward multiplexing. (b) Downward multiplexing.

Crash Recovery

Strategy used by sending host	Strategy used by receiving host: First ACK, then write			Strategy used by receiving host: First write, then ACK		
	AC(W)	AWC	C(AW)	C(WA)	W AC	WC(A)
Always retransmit	OK	DUP	OK	OK	DUP	DUP
Never retransmit	LOST	OK	LOST	LOST	OK	OK
Retransmit in S0	OK	DUP	LOST	LOST	DUP	OK
Retransmit in S1	LOST	OK	OK	OK	OK	DUP

OK = Protocol functions correctly
DUP = Protocol generates a duplicate message
LOST = Protocol loses a message

Different combinations of client and server strategy.

A Simple Transport Protocol

- The Example Service Primitives
- The Example Transport Entity
- The Example as a Finite State Machine

The Example Transport Entity

Network packet	Meaning
CALL REQUEST	Sent to establish a connection
CALL ACCEPTED	Response to CALL REQUEST
CLEAR REQUEST	Sent to release a connection
CLEAR CONFIRMATION	Response to CLEAR REQUEST
DATA	Used to transport data
CREDIT	Control packet for managing the window

The network layer packets used in our example.

The Example Transport Entity (2)

Each connection is in one of seven states:

1. Idle – Connection not established yet.
2. Waiting – CONNECT has been executed, CALL REQUEST sent.
3. Queued – A CALL REQUEST has arrived; no LISTEN yet.
4. Established – The connection has been established.
5. Sending – The user is waiting for permission to send a packet.
6. Receiving – A RECEIVE has been done.
7. DISCONNECTING – a DISCONNECT has been done locally.

The Example as a Finite State Machine

The example protocol as a finite state machine. Each entry has an optional predicate, an optional action, and the new state. The tilde indicates that no major action is taken. An overbar above a predicate indicate the negation of the predicate. Blank entries correspond to impossible or invalid events.

		State						
		Idle	Waiting	Queued	Established	Sending	Receiving	Dis-connecting
Primitives	LISTEN	P1: ~/Idle $\overline{P2}$: A1/Estab $\overline{P2}$: A2/Idle		~/Estab				
	CONNECT	$\overline{P1}$: ~/Idle P1: A3/Wait						
	DISCONNECT				$\overline{P4}$: A5/Idle $\overline{P4}$: A6/Disc			
	SEND				$\overline{P5}$: A7/Estab $\overline{P5}$: A8/Send			
	RECEIVE				A9/Receiving			
Incoming packets	Call_req	$\overline{P3}$: A1/Estab $\overline{P3}$: A4/Queu'd						
	Call_acc		~/Estab					
	Clear_req		~/Idle		A10/Estab	A10/Estab	A10/Estab	~/Idle
	Clear_conf							~/Idle
	DataPkt						A12/Estab	
	Credit				A11/Estab	A7/Estab		
Clock	Timeout			~/Idle				

Predicates

P1: Connection table full
P2: Call_req pending
P3: LISTEN pending
P4: Clear_req pending
P5: Credit available

Actions

A1: Send Call_acc
A2: Wait for Call_req
A3: Send Call_req
A4: Start timer
A5: Send Clear_conf
A6: Send Clear_req
A7: Send message
A8: Wait for credit
A9: Send credit
A10: Set Clr_req_received flag
A11: Record credit
A12: Accept message

The Example as a Finite State Machine (2)

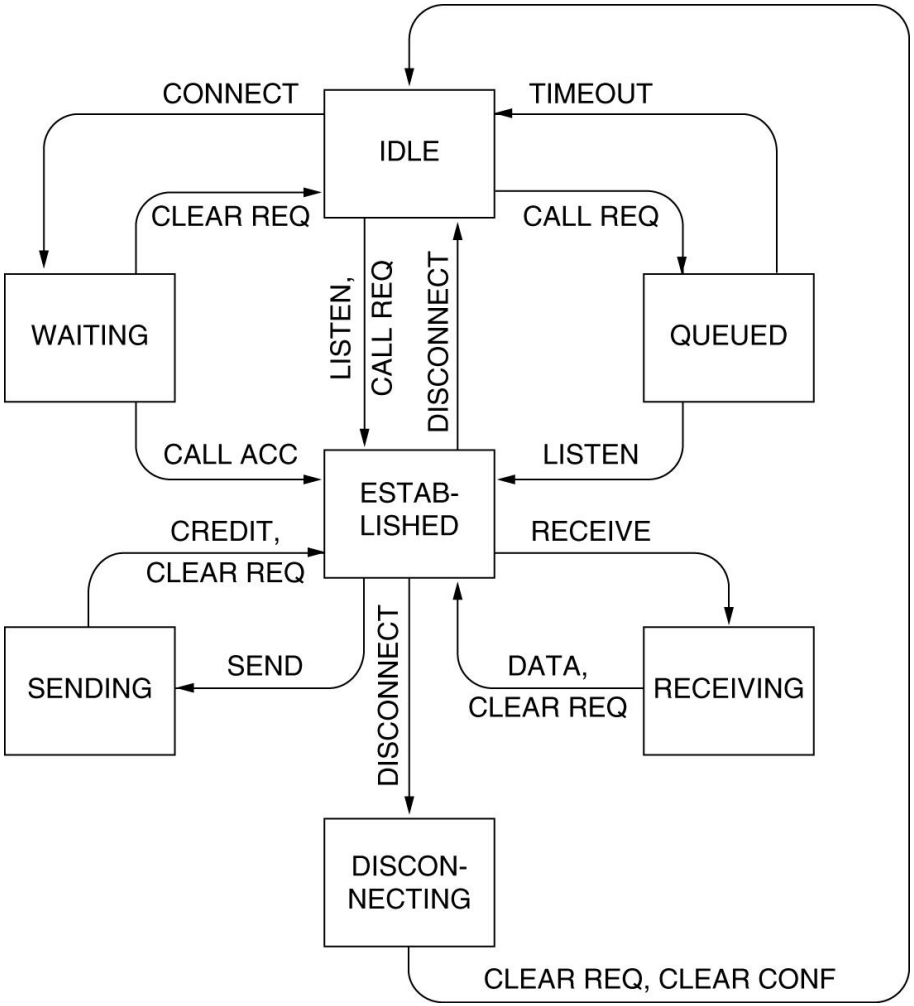

The example protocol in graphical form. Transitions that leave the connection state unchanged have been omitted for simplicity.

The Internet Transport Protocols: UDP

- Introduction to UDP
- Remote Procedure Call
- The Real-Time Transport Protocol

Introduction to UDP

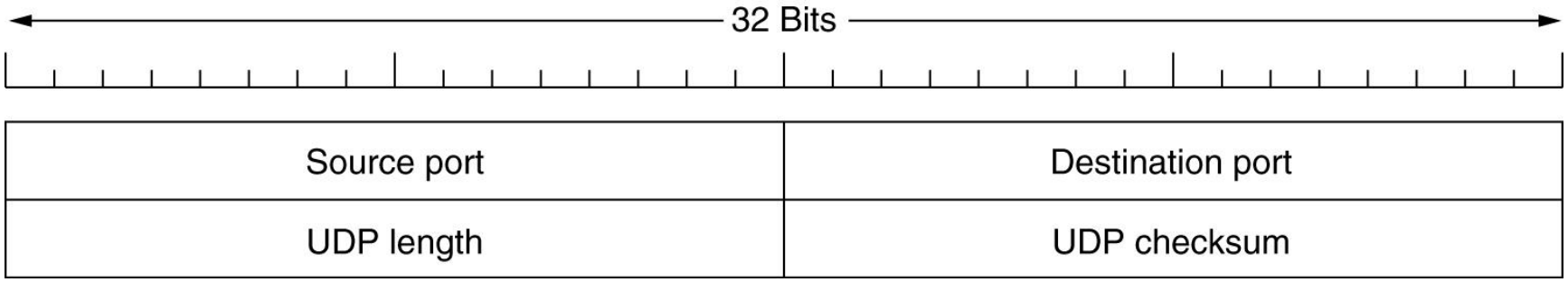

The UDP header.

Remote Procedure Call

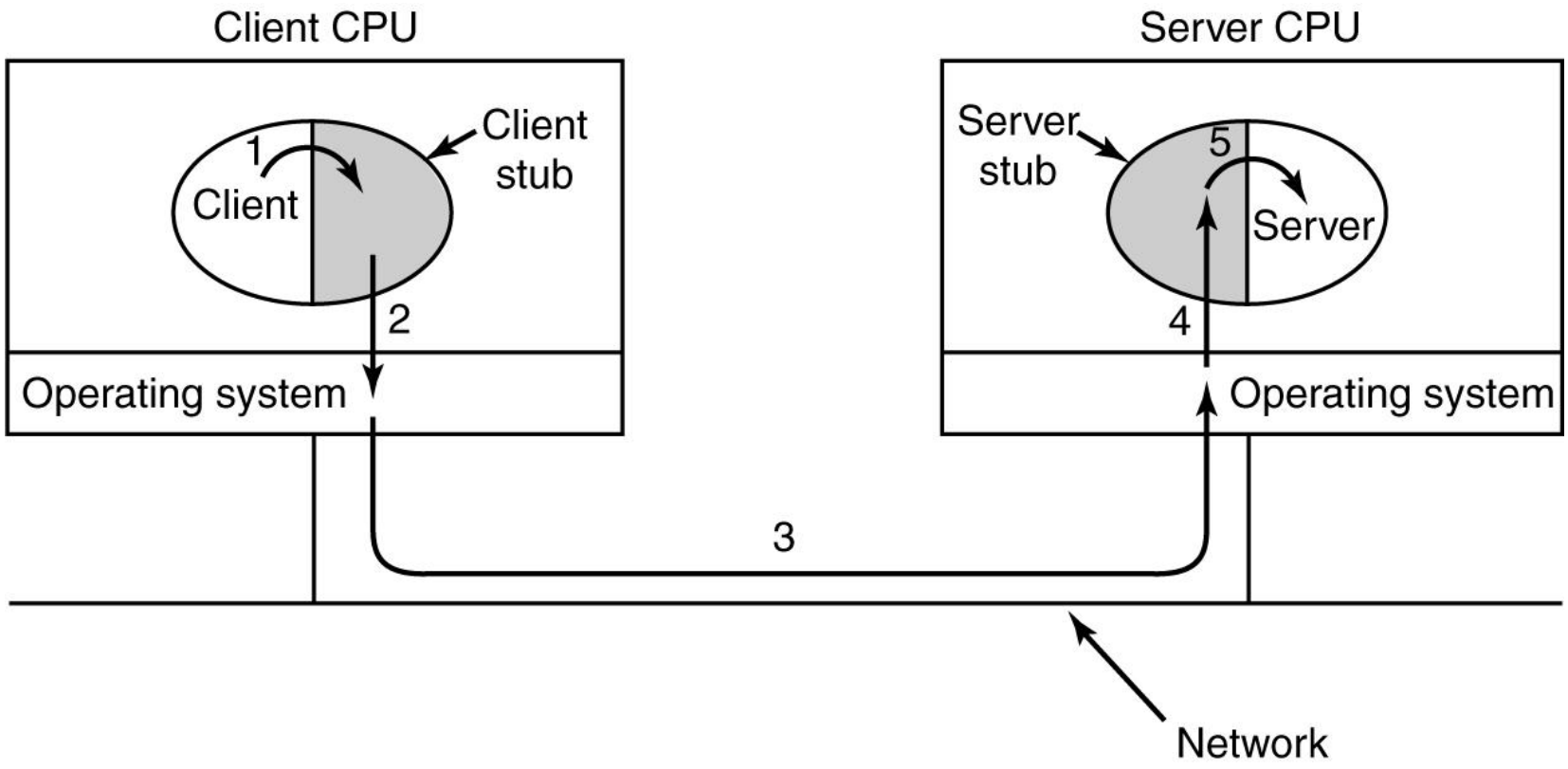

Steps in making a remote procedure call. The stubs are shaded.

The Real-Time Transport Protocol

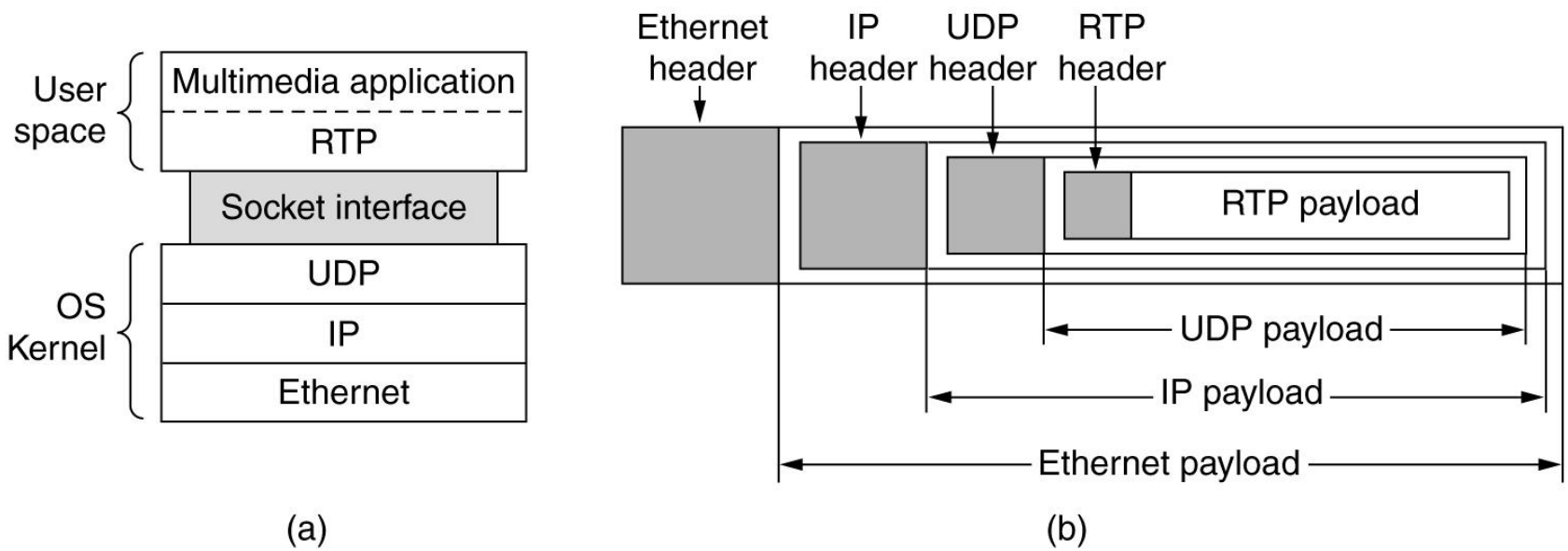

(a) The position of RTP in the protocol stack. (b) Packet nesting.

The Real-Time Transport Protocol (2)

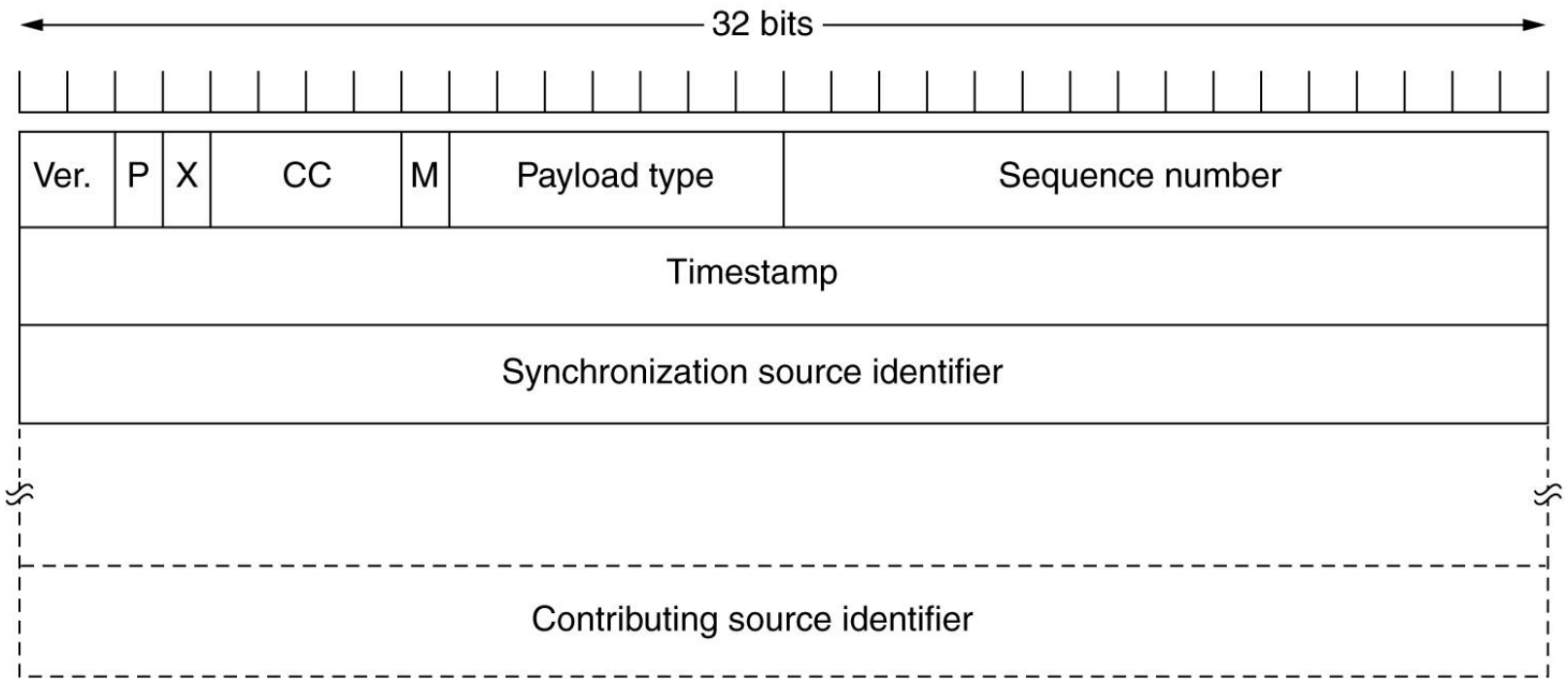

The RTP header.

The Internet Transport Protocols: TCP

- Introduction to TCP
- The TCP Service Model
- The TCP Protocol
- The TCP Segment Header
- TCP Connection Establishment
- TCP Connection Release
- TCP Connection Management Modeling
- TCP Transmission Policy
- TCP Congestion Control
- TCP Timer Management
- Wireless TCP and UDP
- Transactional TCP

The TCP Service Model

Port	Protocol	Use
21	FTP	File transfer
23	Telnet	Remote login
25	SMTP	E-mail
69	TFTP	Trivial File Transfer Protocol
79	Finger	Lookup info about a user
80	HTTP	World Wide Web
110	POP-3	Remote e-mail access
119	NNTP	USENET news

Some assigned ports.

The TCP Service Model (2)

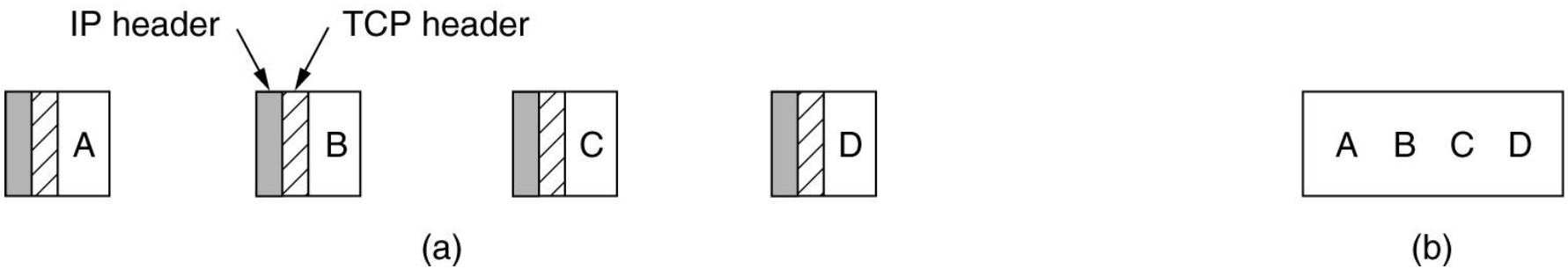

(a) Four 512-byte segments sent as separate IP datagrams.

(b) The 2048 bytes of data delivered to the application in a single READ CALL.

The TCP Segment Header

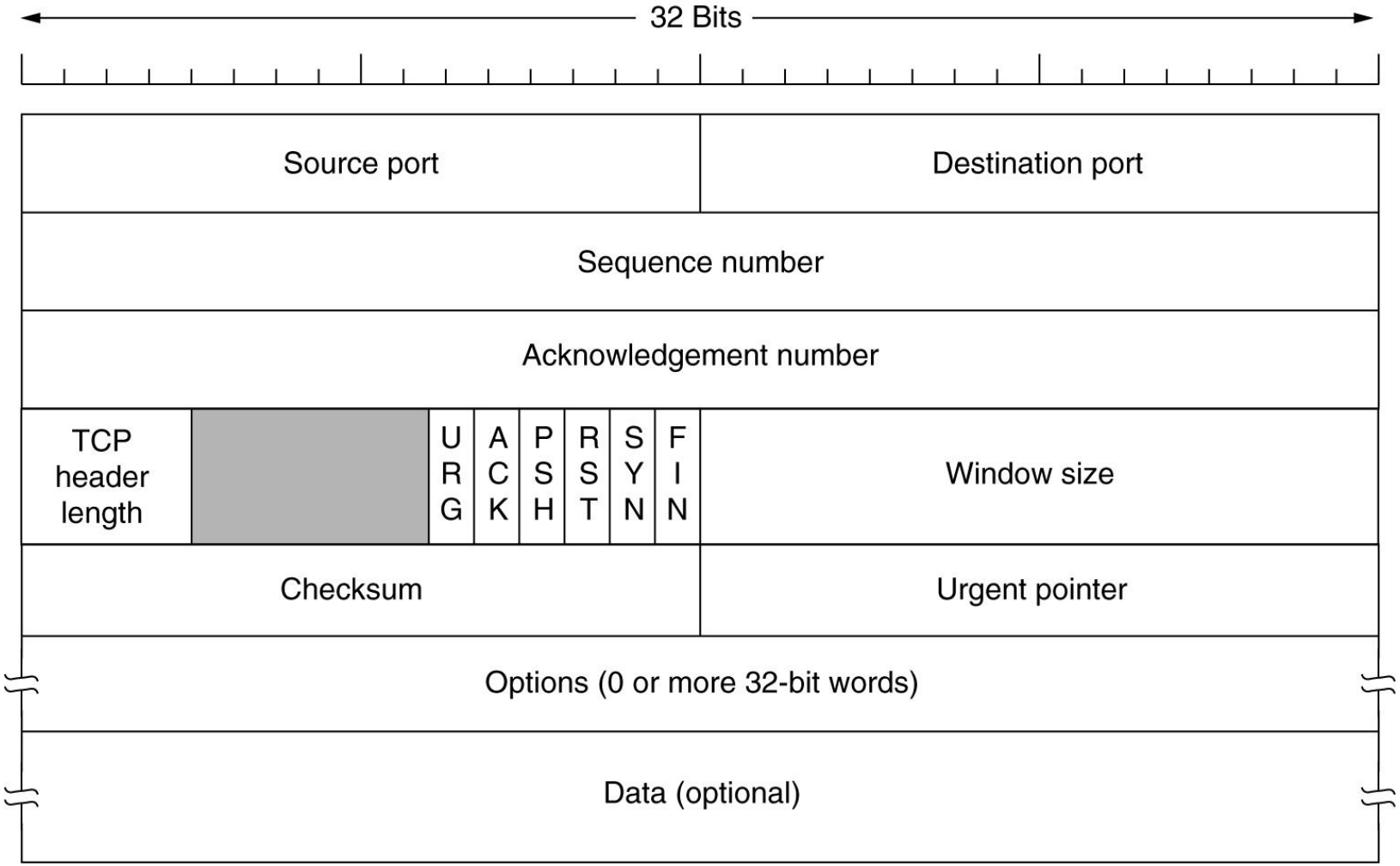

TCP Header.

The TCP Segment Header (2)

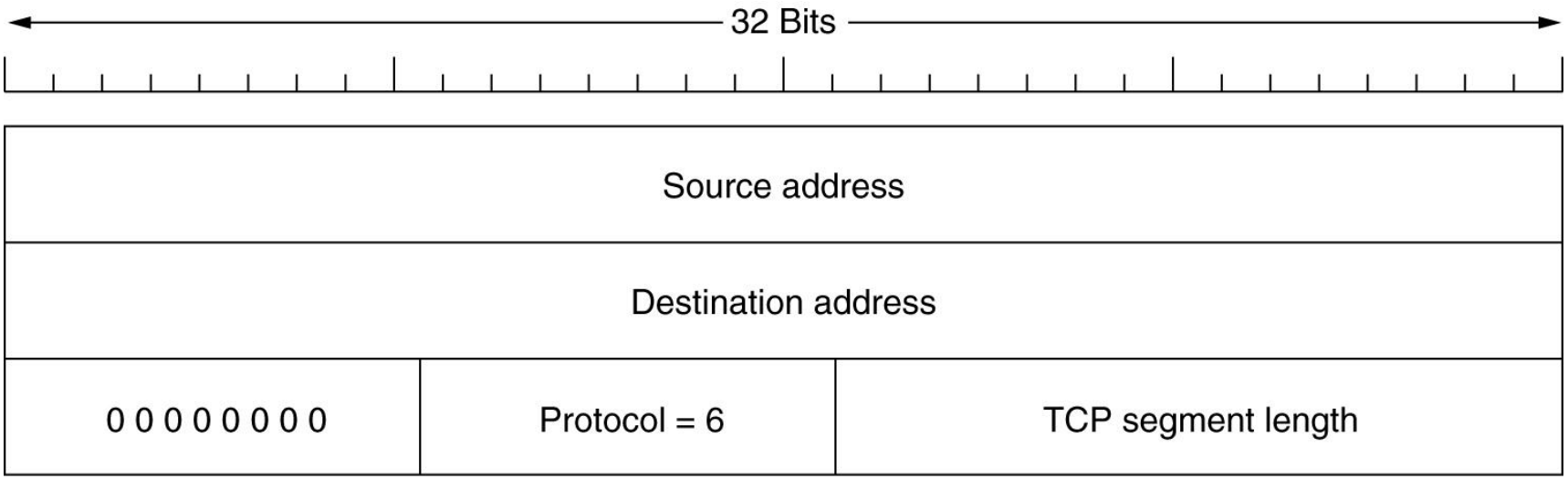

The pseudoheader included in the TCP checksum.

TCP Connection Establishment

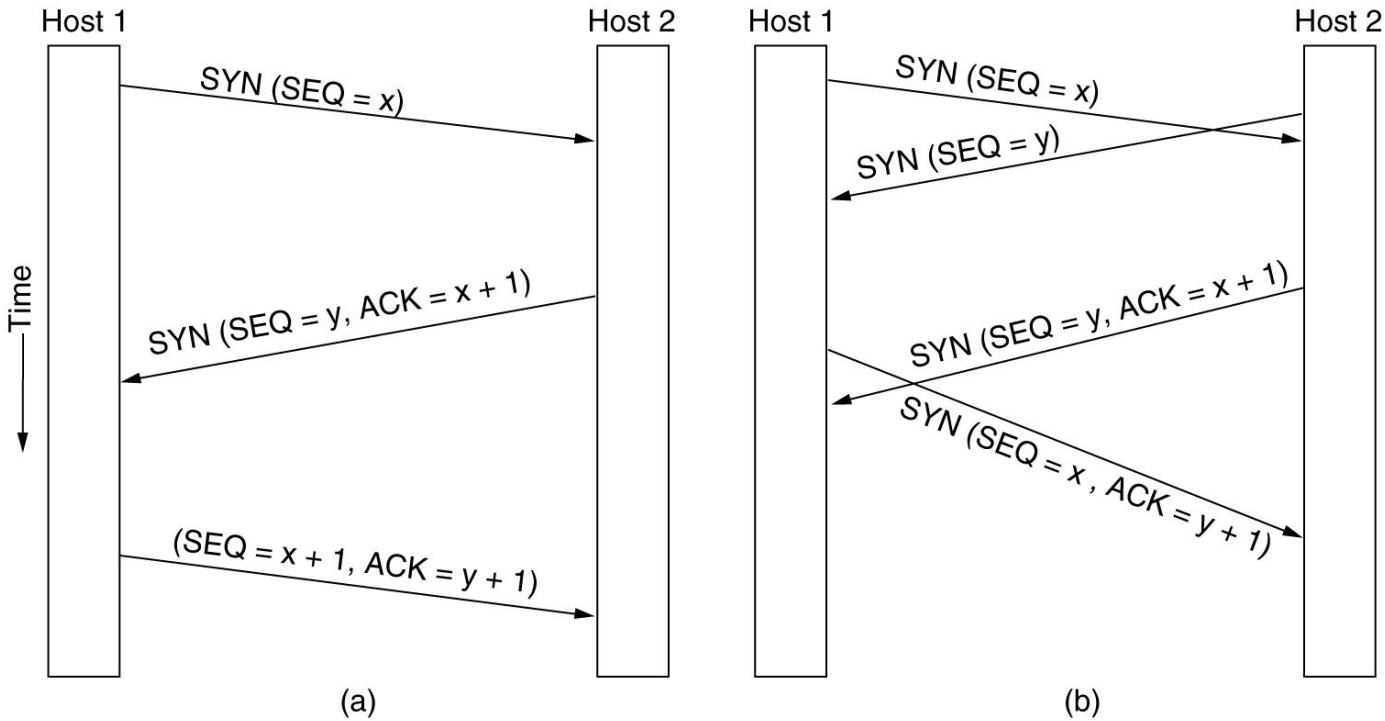

(a) TCP connection establishment in the normal case.
(b) Call collision.

TCP Connection Management Modeling

State	Description
CLOSED	No connection is active or pending
LISTEN	The server is waiting for an incoming call
SYN RCVD	A connection request has arrived; wait for ACK
SYN SENT	The application has started to open a connection
ESTABLISHED	The normal data transfer state
FIN WAIT 1	The application has said it is finished
FIN WAIT 2	The other side has agreed to release
TIMED WAIT	Wait for all packets to die off
CLOSING	Both sides have tried to close simultaneously
CLOSE WAIT	The other side has initiated a release
LAST ACK	Wait for all packets to die off

The states used in the TCP connection management finite state machine.

TCP Connection Management Modeling (2)

TCP connection management finite state machine. The heavy solid line is the normal path for a client. The heavy dashed line is the normal path for a server. The light lines are unusual events. Each transition is labeled by the event causing it and the action resulting from it, separated by a slash.

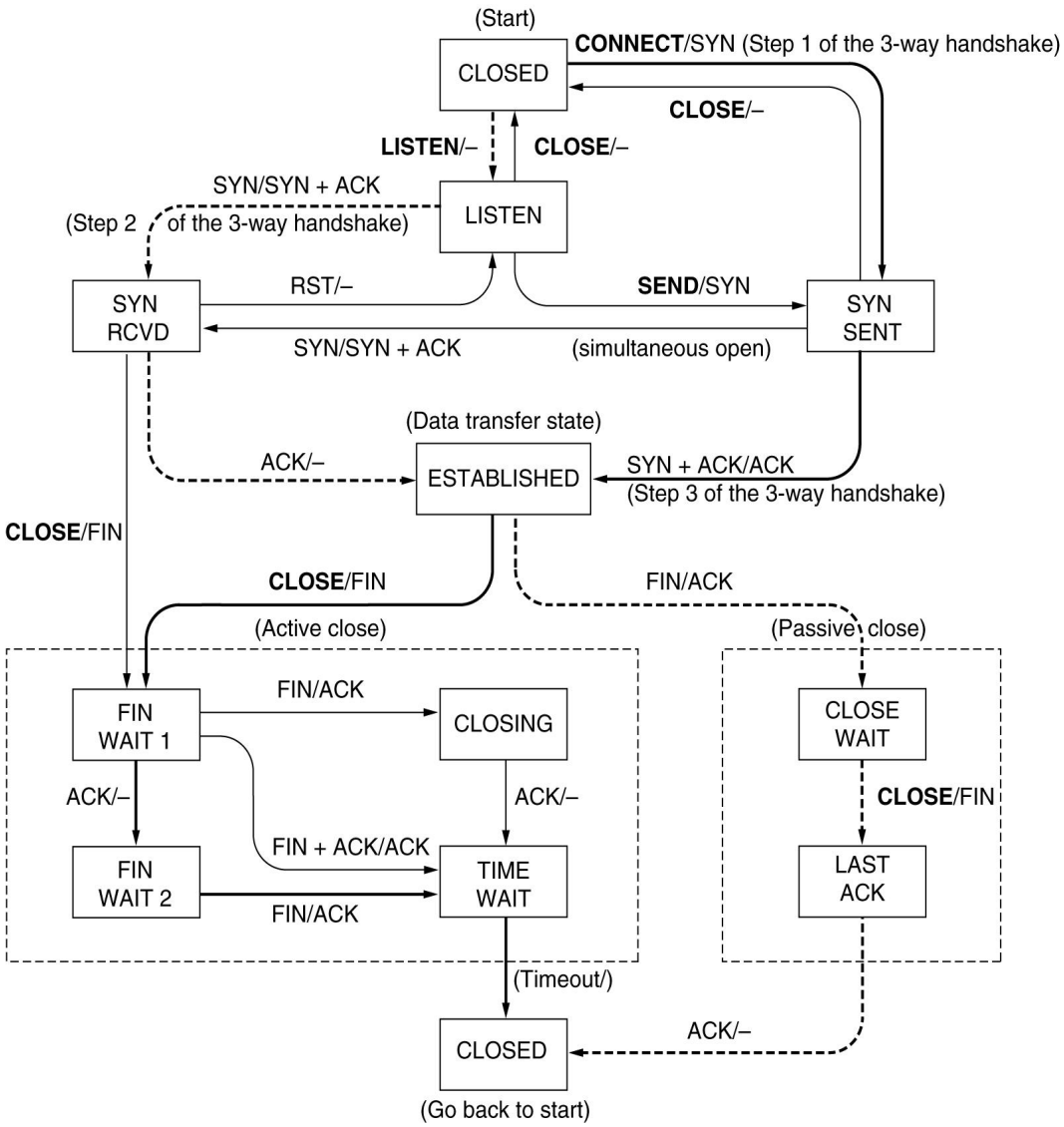

TCP Transmission Policy

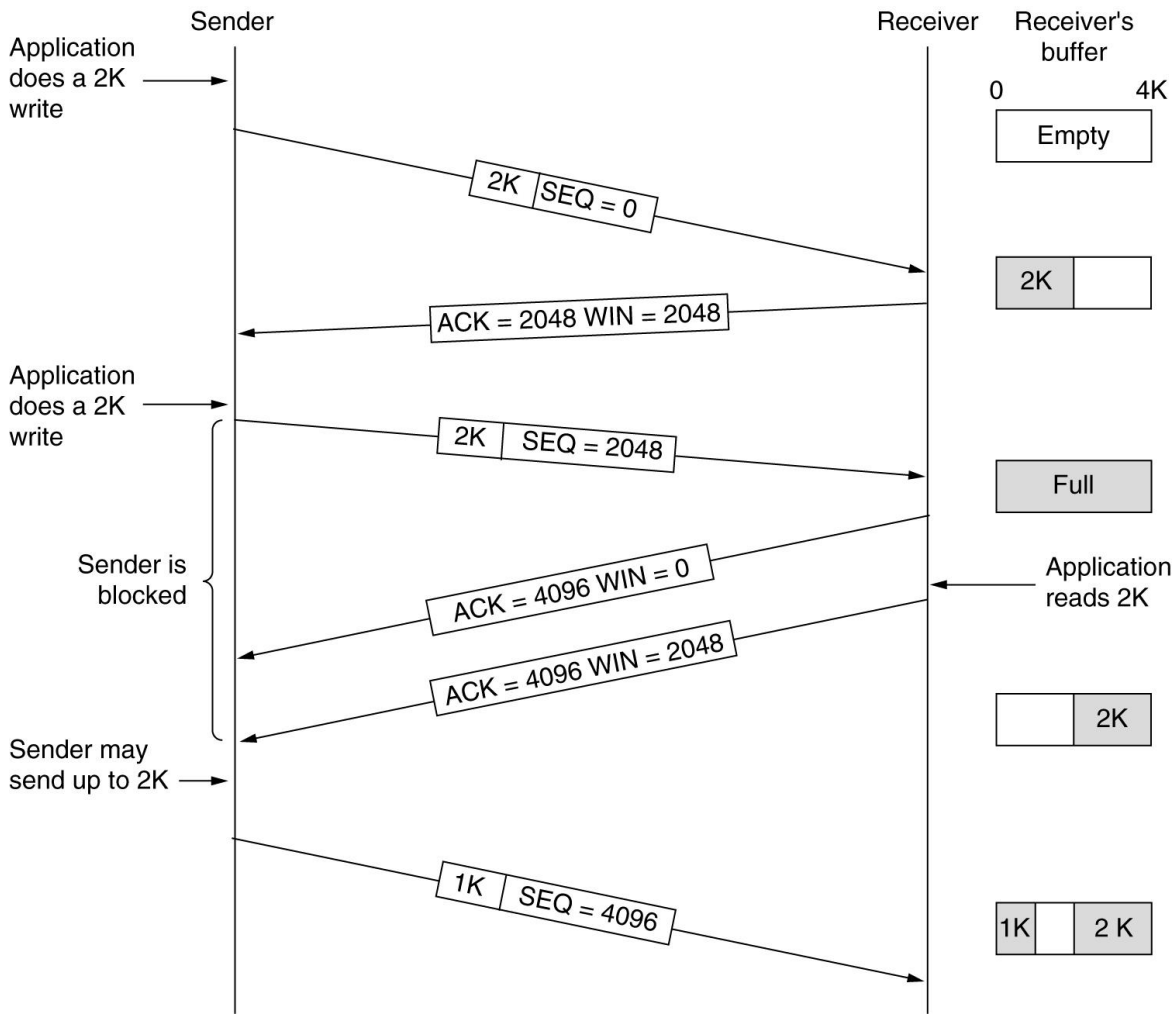

Window management in TCP.

TCP Transmission Policy (2)

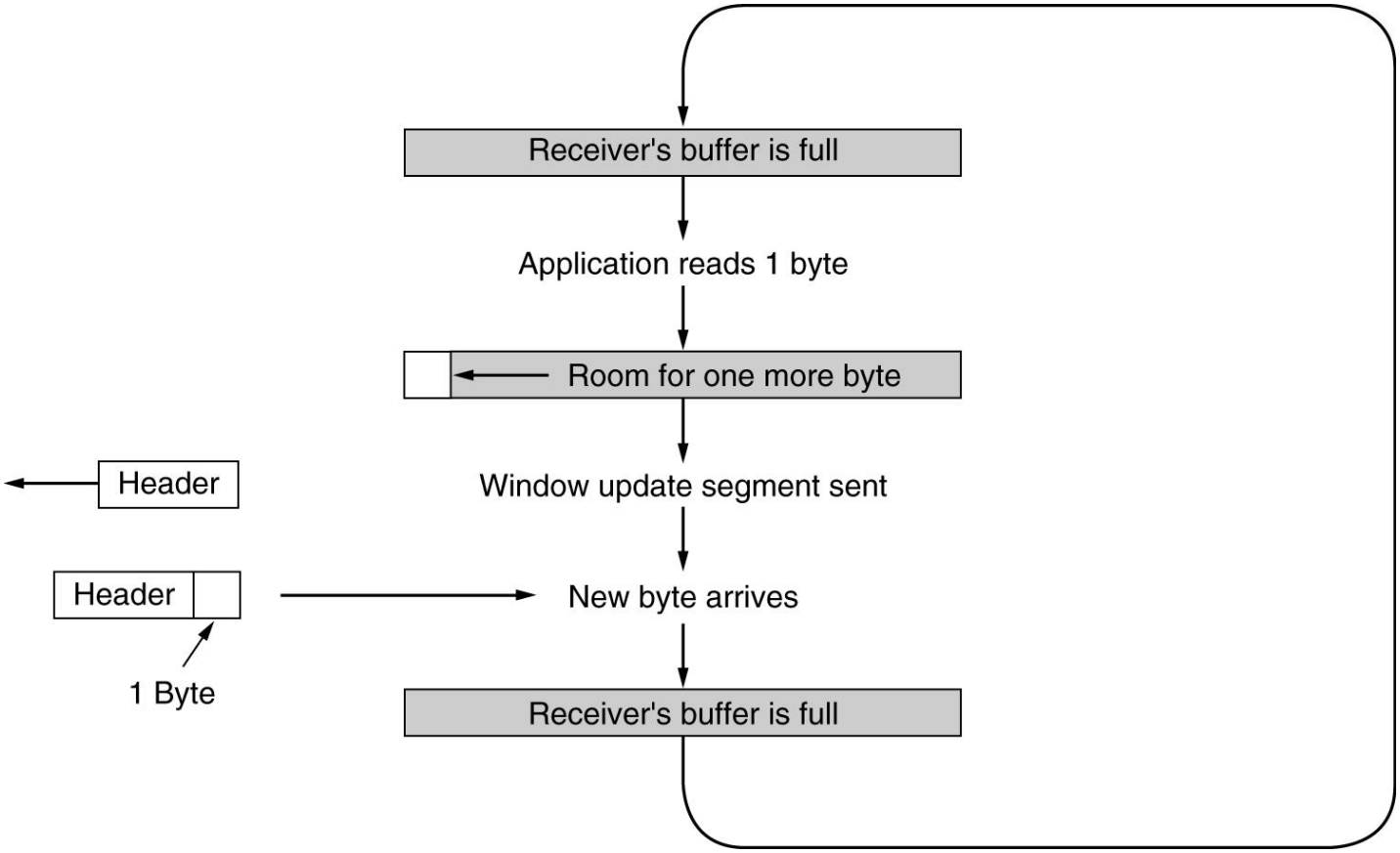

Silly window syndrome.

TCP Congestion Control

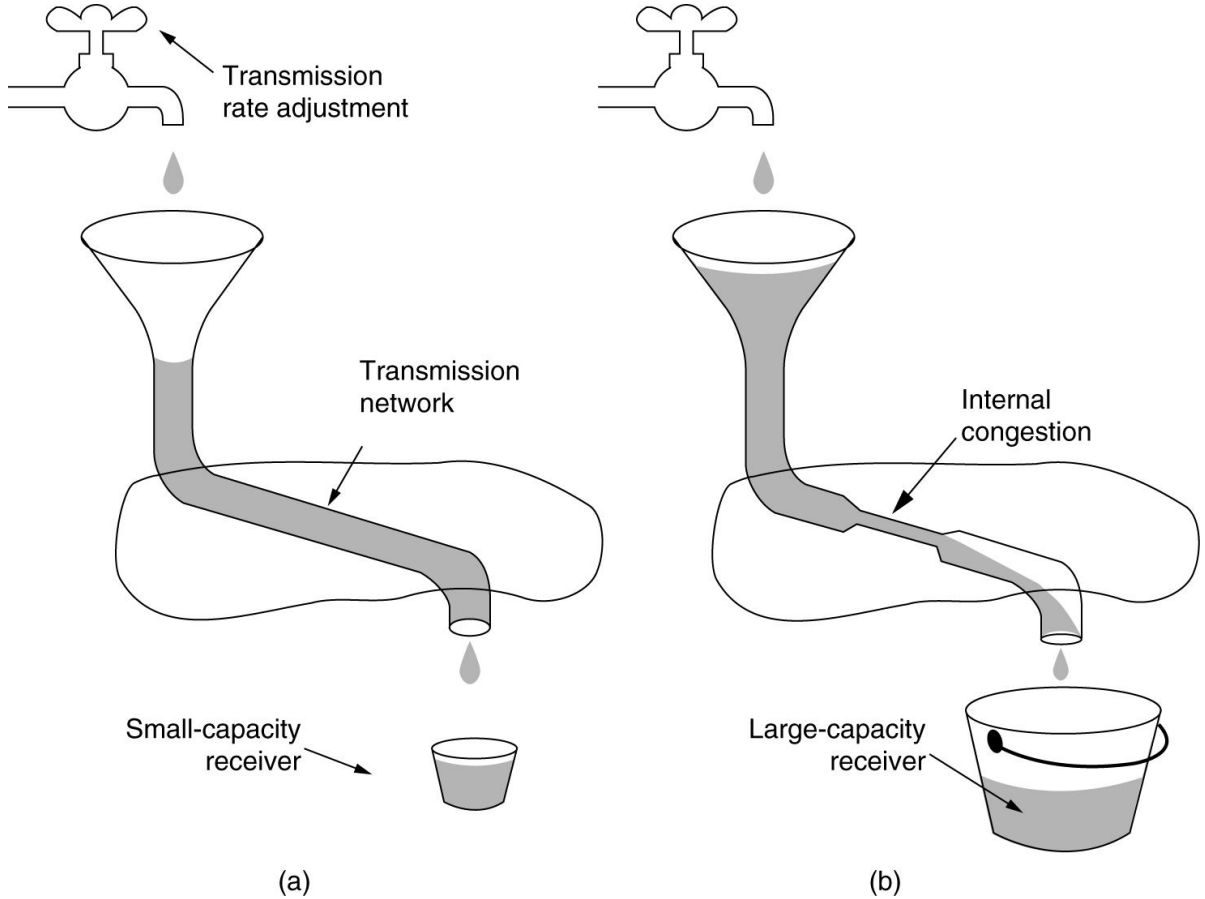

(a) A fast network feeding a low capacity receiver.
(b) A slow network feeding a high-capacity receiver.

TCP Congestion Control (2)

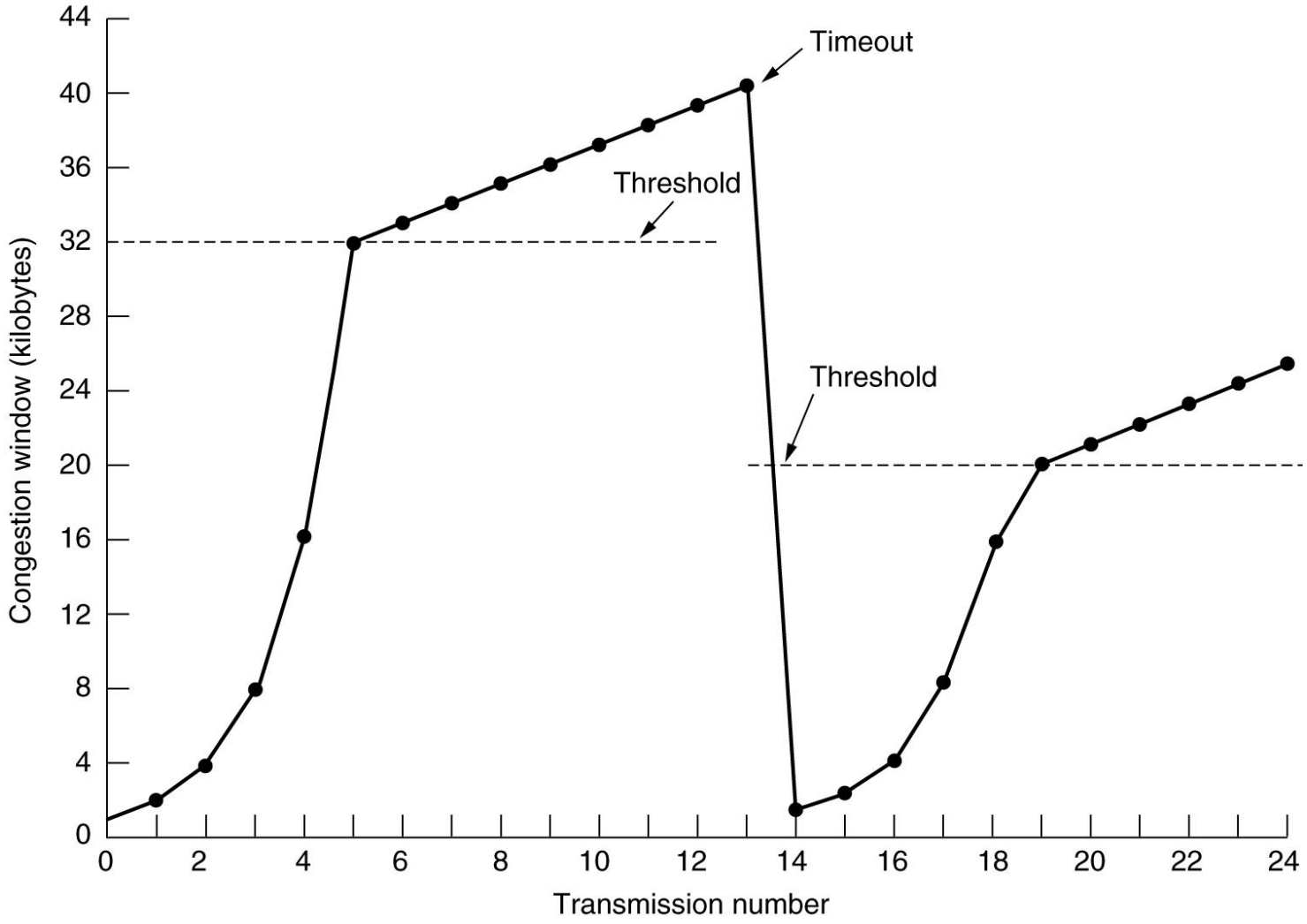

An example of the Internet congestion algorithm.

TCP Timer Management

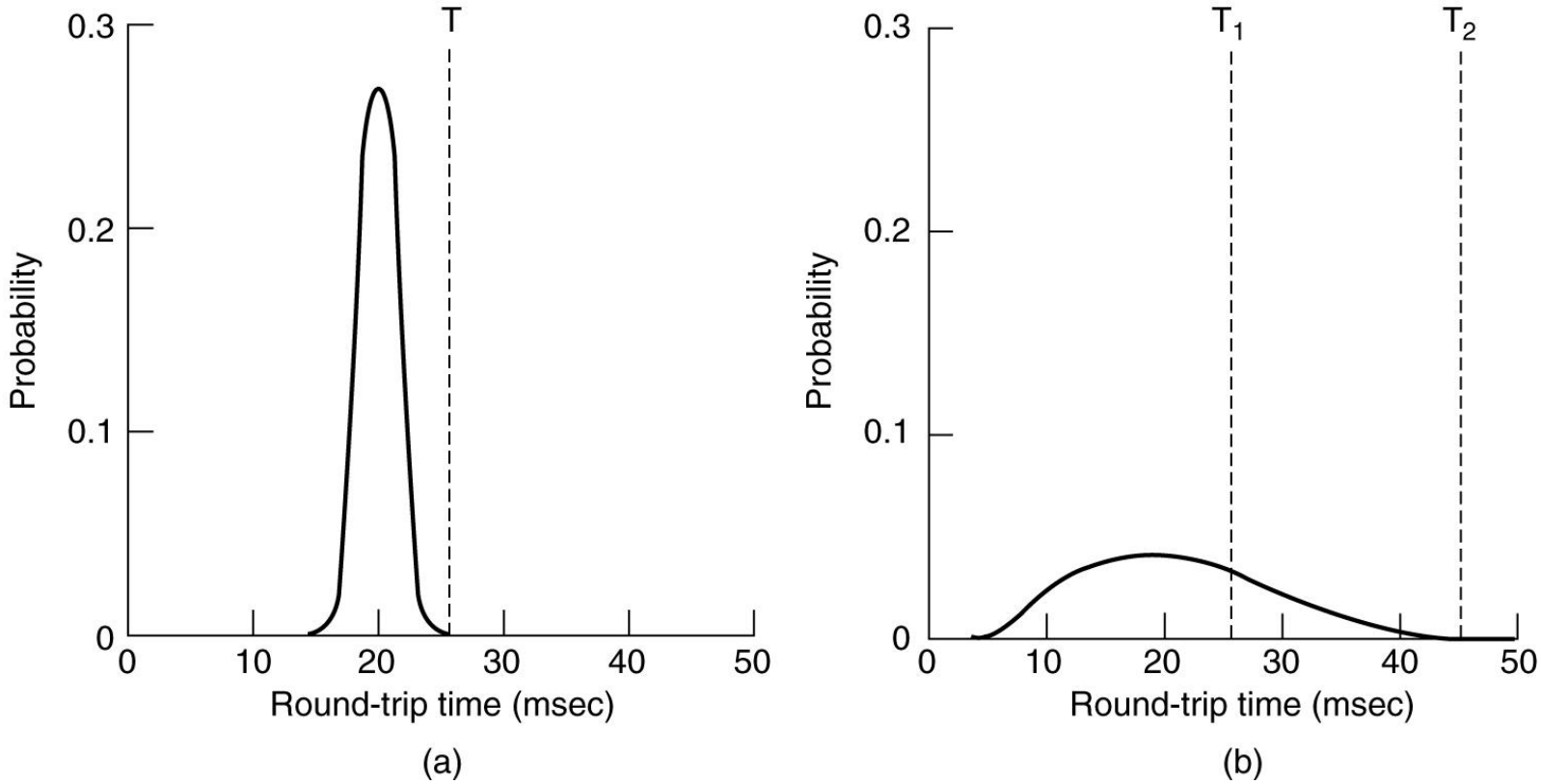

(a) Probability density of ACK arrival times in the data link layer.

(b) Probability density of ACK arrival times for TCP.